Differential Amplifier Design

A differential amplifier is to be used to design a unipolar to bipolar converter. The input and output voltage ranges are known. Given a voltage reference, the resistances are to be calculated

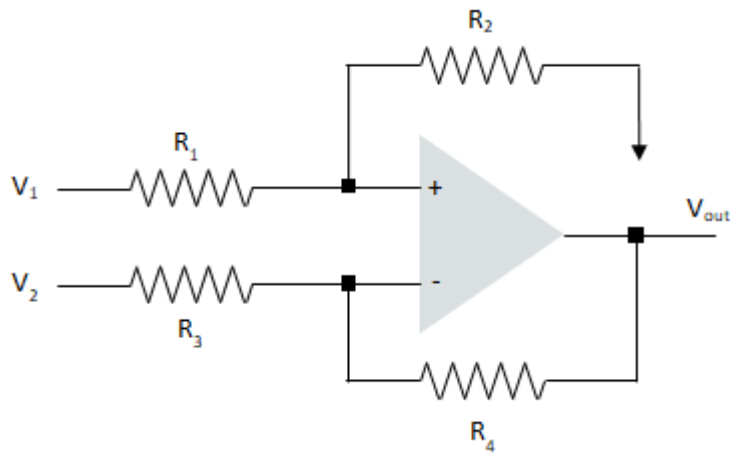

Reference voltage $V_2 := 2.5\ \mathrm{V}$

Known resistances $R_2 := 3 \cdot 10^3\ \Omega$ $R_3 := 10^3\ \Omega$

Approach 1:
Define two expressions evaluated at different parameter values

$$\mathrm{circuit} := V_{out} = V_1 \cdot \frac{1}{1 + \frac{R_1}{R_2}} \cdot \left(1 + \frac{R_4}{R_3}\right) - V_2 \cdot \frac{R_4}{R_3}$$

$$\mathrm{eq1} := \mathrm{eval}\left(\mathrm{circuit}, \left[V_1 = 0\ \mathrm{V}, V_{out} = -1\ \mathrm{V}\right]\right)$$

$$\mathrm{eq2} := \mathrm{eval}\left(\mathrm{circuit}, \left[V_1 = 2.5\ \mathrm{V}, V_{out} = 1\ \mathrm{V}\right]\right)$$

$$\mathrm{fsolve}\left(\{\mathrm{eq1}, \mathrm{eq2}\}\right) = \left\{R_1 = 2.250 \times 10^3\ \Omega, R_4 = 400.000\ \Omega\right\}$$

Approach 2:
Define a function using arrow operators

$$V_{out} := \left(V_1, R_1, R_4\right) \rightarrow V_1 \cdot \frac{1}{1 + \frac{R_1}{R_2}} \cdot \left(1 + \frac{R_4}{R_3}\right) - V_2 \cdot \frac{R_4}{R_3}$$

$$\mathrm{sol} := \mathrm{fsolve}\left(\left\{V_{out}\left(0\ \mathrm{V}, R_1, R_4\right) = -1\ \mathrm{V}, V_{out}\left(2.5\ \mathrm{V}, R_1, R_4\right) = 1\ \mathrm{V}\right\}\right)$$

$$\mathrm{sol} = \left\{R_1 = 2.250 \times 10^3\ \Omega, R_4 = 400.000\ \Omega\right\}$$